Small OEM TEC Controller

RoHS COMPLIANT

The TEC-1091 is a specialized TEC Controller / power supply able to precision-drive a single Peltier element.

It features a true bipolar DC current source for cooling / heating, two temperature monitoring inputs (1x main, 1x auxiliary) and intelligent PID control with auto tuning. The TEC-1091 is fully digitally controlled, it's hard- and firmware offer numerous communication and safety options.

The included PC-Software allows configuration, control, monitoring and live diagnosis of the TEC Controller via USB, RS485 and RS232 TTL. All parameters are saved to non-volatile memory. Saving can be disabled for bus operation.

For the most straightforward applications, only a power supply, Peltier elements and two temperature sensors need to be connected to the TEC-1091. After power-up the unit will operate according to pre-configured values. (In stand-alone mode no control interface is needed.)

The TEC-1091 can handle either Pt100, Pt1000, NTC or Voltage temperature probes. For highest precision and stability applications a Pt100 / 4-wire input configuration is recommended. Analog measurement circuit is factory calibrated.

Auxiliary temperature input allows the connection of an NTC probe that is located on the heat sink of the Peltier element. This additional data is used to compensate for parasitic thermal conduction of Peltier element. Also, it allows the control of an external heat sink cooling fan.

The heating and cooling power is optimized by proprietary thermal management routines based on power balance models (for Peltier elements and resistive heaters).

Further functionality includes: Smooth temperature ramping, thermal stability indication and auto gain (NTC probes). The PC-Software allows data logging and configuration import/export.

Many features (hardware, software) of this OEM product are customizable upon request.

Features

Output Stage:

- DC Input Voltage: 5 – 24 V
- Output Voltage: 0 to ±21 V (max. ~ 0.9 · U_{IN})
- Output Current: 0 to ±4 A, <1 % Ripple
  (TEC Modules with higher Output Power available)

Main Features:

- Temperature Sensor Types: Pt100, Pt1000, NTC, Voltage
- Temperature Precision / Stability: <0.01 °C
- Temperature Control & Measurement Frequency: 1 Hz, 10 Hz, 80 Hz
- Performance-optimized PID for Thermal Power Control
- Configuration / Diagn. over USB / RS485 PC Software
- Dimensions (L x W x H): 65 mm x 38 mm x 14 mm
- Efficiency: 96 % (@ 90 % Load)
- Cooling not required (natural convection)
- Auxiliary Peltier Heat Sink NTC Temp. Sensor Input

Operation Modes:

- Stand-Alone without Live Control Interface
- Remotely-Controlled over USB, RS485 / RS422, RS232 TTL, I/O
- Script-Controlled over Lookup Table Read-Out

Driver Modes:

- DC Power Supply: Set Current or Voltage
- Temperature Control: PID Settings, Auto Tuning, optional Cool/Heat-Only or Resistor modes

Data Interfaces:

- USB 2.0 1kV isolated (FTDI Chip)
- 1x RS485 / RS422
- 1x RS232 TTL

General Purpose I/O Features:

- 4x Digital I/O Signals (3.3 V / 5 V)
- Configurable as Input to control TEC-1091 (Enable, Temperature Up / Down etc.)
- Configurable as Output to monitor TEC-1091 (Error Indication, Temperature Stable Indication etc.)

Optional Components:

- Various displays available up to 4x20 Chars (DPY-1113)

Further Information:

- Please contact us for additional information or consult the current TEC Controller User Manual (Document 5216).
- The TEC-1091 is part of the TEC-Family of Meerstetter TEC Controllers. It is designed to operate alongside devices of the LDD-Family of laser diode drivers. Both families of drivers share the same system bus, design, technology and physical dimensions.

Absolute Maximum Ratings

Supply voltage (DC)	27 V
Bipolar output voltage	±24 V
Bipolar output current	±6 A

Operating Characteristics for all firmware versions

Temperature	-40 – 90 °C

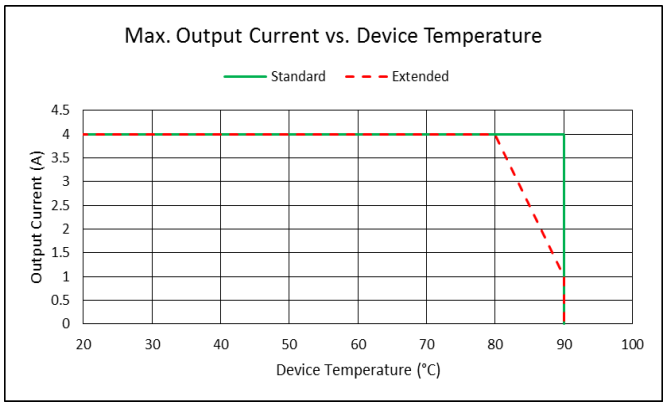

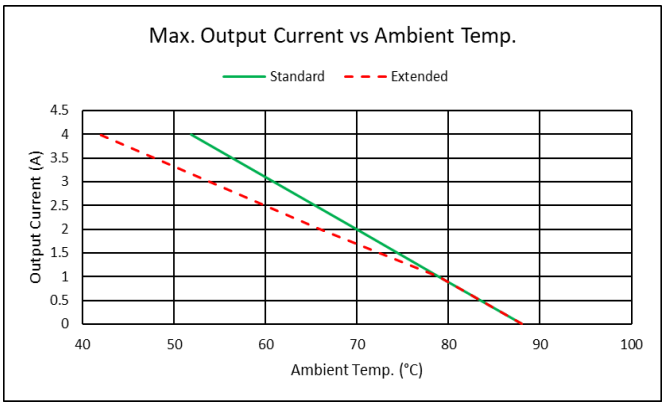

Standard or Extended Device Temperature Mode can be set as software setting. Using forced air cooling, it is possible to enhance the ambient temperature performance.

Electrical Characteristics

Unless otherwise noted: T_A = 25 °C, U_{IN} = 24 V, R_{load} = 3.75 Ω, FW >= v4.00

Symbol	Parameter	Test Conditions	Min	Typ	Max	Units
DC Power Supply Input:						
U_{IN}	Supply voltage		4.9		24	V
U_{IN} Ripple	Ripple tolerance	U_{IN} never below $U_{IN\ min}$			300	mV_{PP}
Output:						
I_{OUT}	Bipolar current swing				±4	A
U_{OUT}	Bipolar voltage swing	U_{OUT} is maximum ~0.9 · U_{IN}; See diagram			±21	V
U_{OUT} Ripple	Voltage ripple	@ 4 A		80		mV_{PP}
System Characteristics:						
$\eta_{50\%}$	Power efficiency	@ 50 % load (10.5V, 4A)		94		%
$\eta_{100\%}$	Power efficiency	@ 100 % load (21V, 4A)		96		%
Output Monitoring (I_{OUT} Resolution is 1.46mA; U_{OUT} Resolution is 6.1mV)						
I_{OUT} Read	Precision	@ 3.8 A		1	5	%
U_{OUT} Read	Precision	@ 15.0 V		1	3	%

Output Safety Characteristics

Unless otherwise noted: T_A = 25 °C, U_{IN} = 24 V

Symbol	Parameter	Test Conditions / Hints	Min	Typ	Max	Units
Output Stage Protection Delays:						
t_{OFF}	Short circuit	Full load condition		10	30	µs
t_{OFF}	Power system limits	Current and voltage limits			200	µs
Output Stage Current Supervision: (If the OUT+ and OUT- currents differ too much, an error is generated)						
I_{OUT_DIFF}	Error threshold			400		mA

Object Temperature Measuring Characteristics (Pt100 and Pt1000 Probes)

Measurement configuration = 23bit / 4-wire / unshielded cable <50mm

Symbol	Parameter	Test Conditions / Hints	Min	Typ	Max	Units
$T_{OBJ, RANGE}$	Range	Range is extendable upon request Default measurement range is -220 °C … +200 °C Extended measurement range is -193 °C … +787 °C	-100		+200	°C
$T_{OBJ, PREC}$	Precision	(EN 60751 / IEC 751)		0.005	0.01	°C
$T_{OBJ, COEFF}$	Temp. Coefficient	Relative to device temperature			1.6 m	°C/K
$T_{OBJ, NOISE}$	Value Noise	Reference measurement fluctuations while output stage operating @ 70 % load		0.003		°C
$T_{OBJ, REP}$	Repeatability	Repeated measurements of reference resistors after up to 3 days		0.005		°C

Object Temperature Measuring Characteristics (NTC Probes)

NTC thermistor resistive input characteristics translate into temperature ranges valid for only one type of NTC probe. Below example is given in the case of an NTC $B_{25/100}$ 3988K R_{25} 10k temperature sensor.

Symbol	Parameter	Test Conditions / Hints	Min	Typ	Max	Units
$R_{OBJ, RANGE}$	ADC Auto Gain PGA = 1 or 8 or 32	Standard Configuration R_s = 56 kΩ	105		55742	Ω
		Corresponding temperature range	176 to -10.1			°C
		Very Low-°T Configuration NTC	73		1M	Ω
		Corresponding temperature range	194.3 to -55.5			°C

$R_{OBJ, RANGE}$ is resistance range of the NTC sensor

Object Temperature Monitoring Configuration (Voltage Measurement VIN1)

Sensors with linear Voltage/Temperature output.

Symbol	Parameter	Test Conditions / Hints	Min	Typ	Max	Units
$V_{SENS, DIFF}$	Range	Differential Input voltage Temperature range depends on sensor used	-2.039		2.039	V
$V_{OBJUx, ABS}$	Range	Absolute Input voltage	-0.1		5.1	V

Sink Temperature Measuring Characteristics (NTC only)

T_A = 25 °C, measurement configuration = 12bit / 2-wire / unshielded cable <50 mm, °T probe = NTC $B_{25/100}$ 3988K R_{25} 10k

Symbol	Parameter	Test Conditions / Hints	Min	Typ	Max	Units
$R_{SINK, RANGE}$	Range		50		49781	Ω
		Corresponding temperature range	214 to -8.1			°C

RS232 TTL and General Purpose Digital I/O Characteristics (GPIO1 … GPIO4, RX, TX)

Unless otherwise noted: T_A = 25 °C, U_{IN} = 24 V

Symbol	Parameter	Comments	Min	Typ	Max	Units
Input Characteristics:						
U_{IH}	Logic high input threshold		2.38			V
U_{IL}	Logic low input threshold				0.93	V
U_{IMAX}	Maximum input voltage		-0.5		5.5	V
Output Characteristics: (Microprocessor)						
U_{OH}	Logic high output voltage	Output current 8mA	2.8			V
U_{OL}	Logic low output voltage	Input current 8mA			0.4	V
ESD Protection: (Between Processor and Connector)						
U_{PP}	ESD discharge	IEC61000−4−2			100	kV
R_A	Series resistance		170	200	230	Ω

Package Outline and Pin Configuration

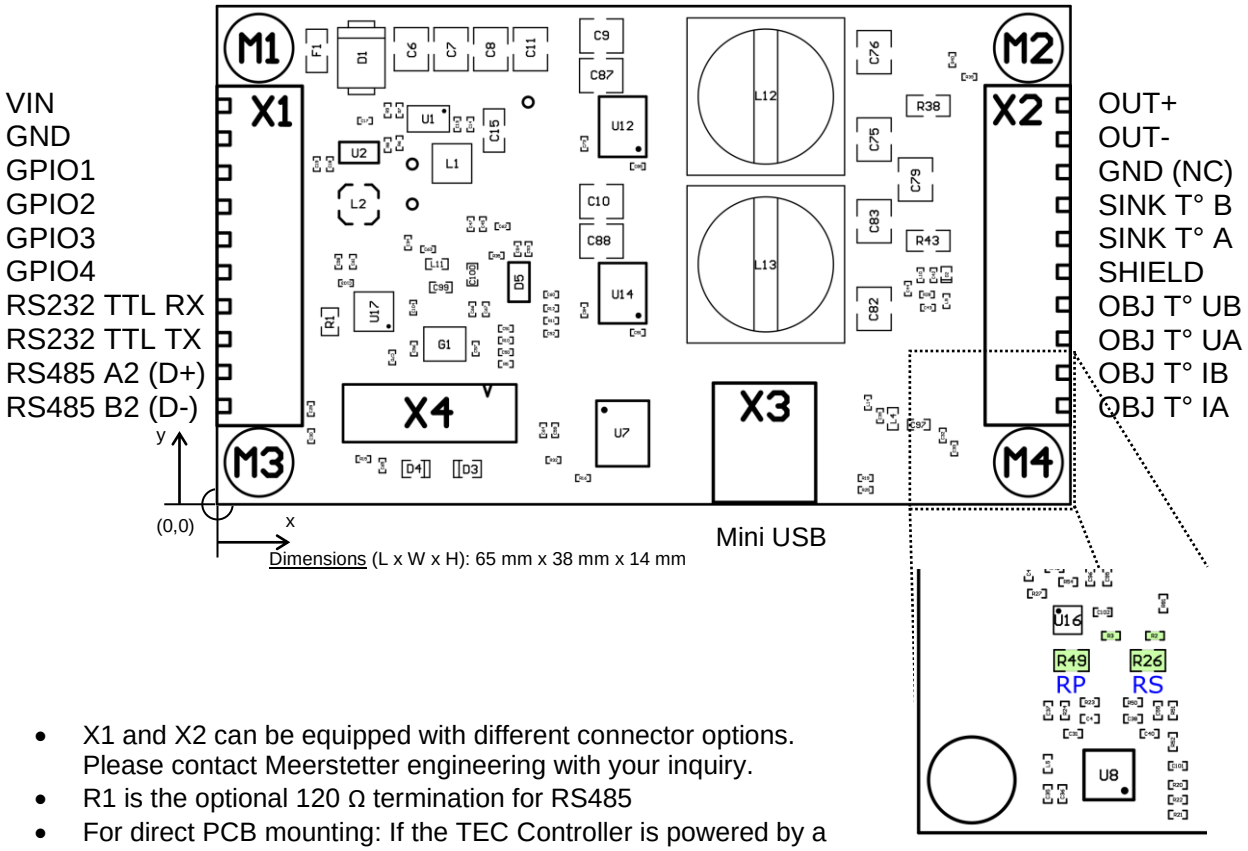

Dimensions (L x W x H): 65 mm x 38 mm x 14 mm

- X1 and X2 can be equipped with different connector options. Please contact Meerstetter engineering with your inquiry.
- R1 is the optional 120 Ω termination for RS485
- For direct PCB mounting: If the TEC Controller is powered by a sensitive power supply net, it is recommended decouple the TEC Controller Supply by some filter components. Please contact us for further information.
- For direct PCB mounting: Do not place any component under the TEC Controller.
- RP, RS and the two Jumpers R2 and R3 define the Object Sensor Type

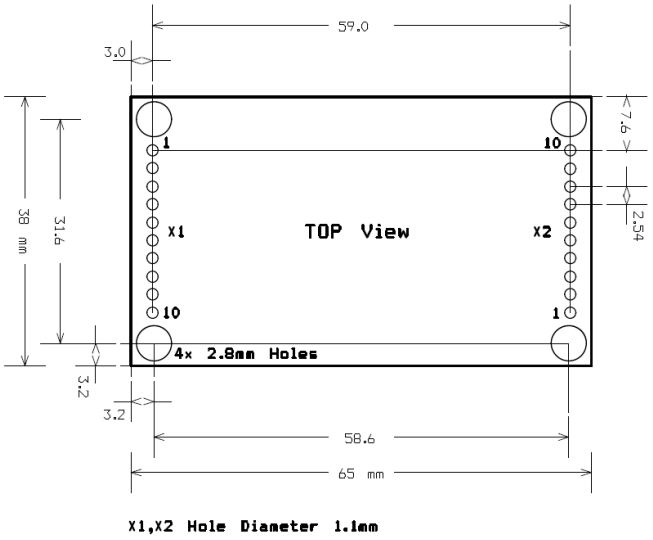

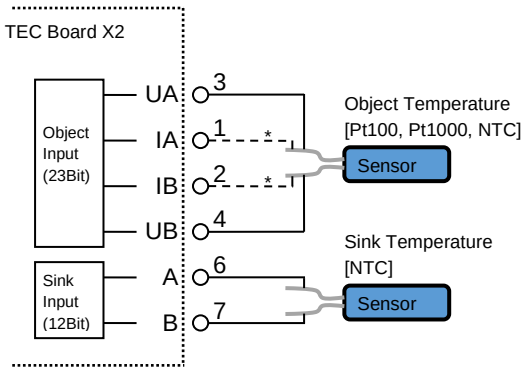

* In case of Pt100 or Pt1000, use 4 wires to connect the Object Temperature Sensor

Peltier element, temperature probes, power supply and connectors not included.

Operation-Modes and Communication Options

The TEC-1091 is an OEM precision TEC Controller that is primarily designed to operate as a stand-alone device. Once configured and in operation, its basic status is visually indicated by on-board green and red LEDs and their blinking pattern. More detailed status information can be polled at any time by industry-standard RS485 / RS232 TTL connection or by USB (see box below). The TEC-1091 can also operate in a remotely-controlled manner, with parameters adjusted on the fly.

Configured as a DC power-supply, the TEC-1091 can handle current and voltage settings. In the remote-control case, temperature data may be passed on to be processed by the host.

Configurable parameters further include: sensor linearization (Pt100 / Pt1000) and Steinhart-Hart modeling (NTC), temperature acquisition hardware calibration, Peltier element modeling, PID controller auto tuning, nominal temperature ramping, current, voltage and temperature limits, error thresholds, etc. Please refer to the TEC Controller User Manual (Document 5216) for further information.

TEC Service Software

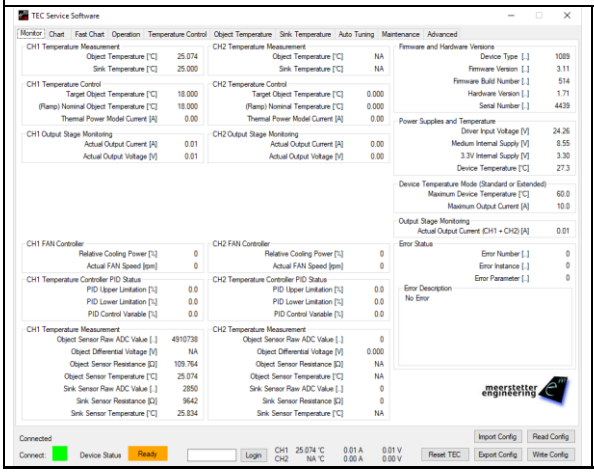

The included TEC Service Software is a powerful tool that allows monitoring, data logging and full configuration of the TEC-1091 via a standard USB or an RS485 / RS232 TTL connection from a PC running Windows.
This tool is ideal for laboratory setups, product evaluation and commissioning. In conjunction with the comprehensive set of error codes and built-in descriptions, it facilitates diagnosis and debugging.
The software also supplies a user-friendly interface for maintenance (*e.g.* firmware upgrades), device calibration and basic data logging.
Please refer to the user manual for more information on features and system requirements.

Temperature Control (Autotuned PID)

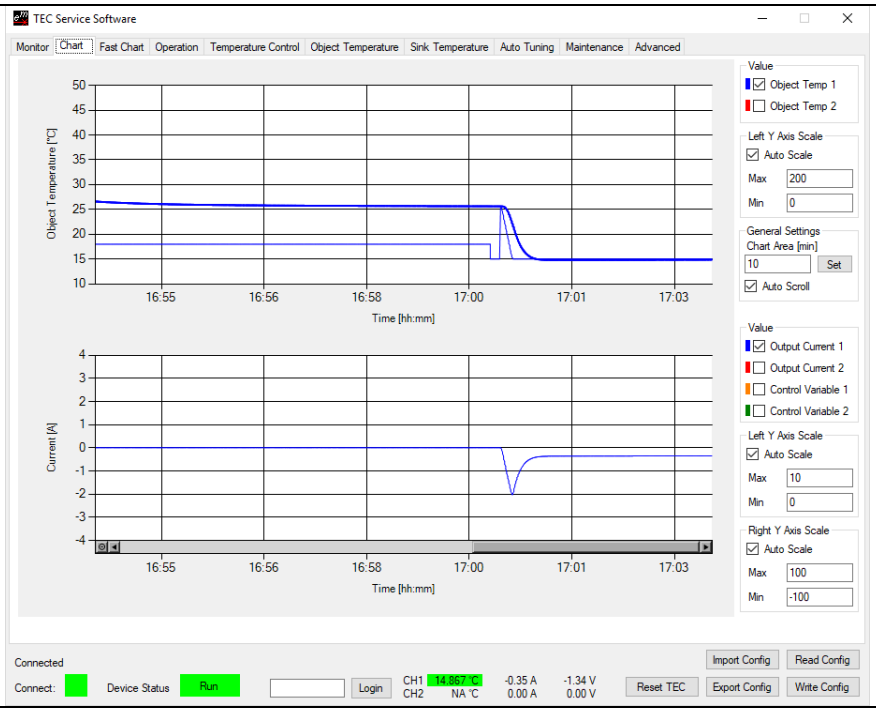

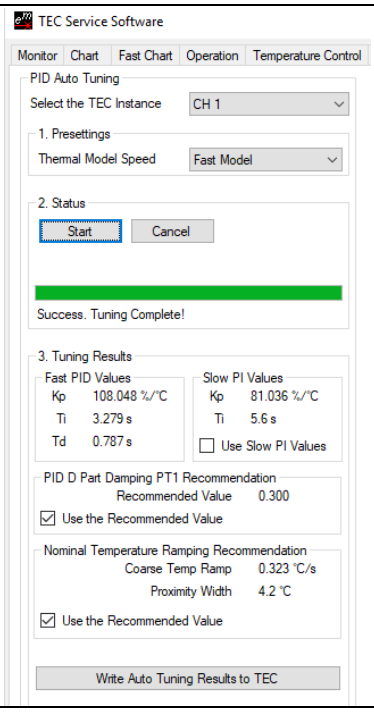

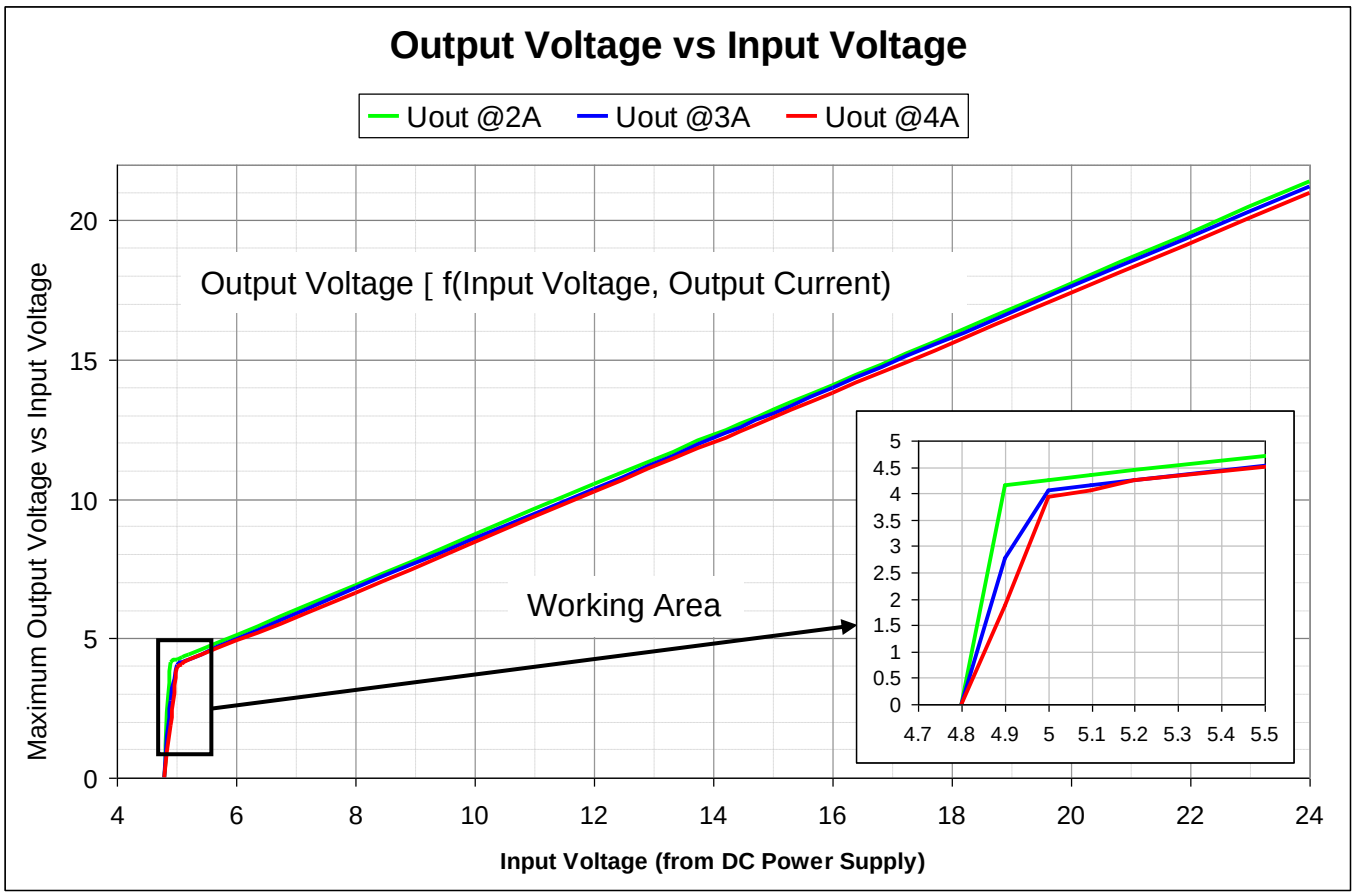

TEC-1091 Ordering Information, Hardware Configuration

Example Configuration: **TEC-1091-PT100-SCREW**

TEC Model:
- TEC-1091

Object Sensor Type:
- PT100 (4 Wire)
- PT1000 (4 Wire)
- NTC (2 Wire)
- VIN1

Terminal Configuration:
- SCREW (2.54mm Screw Terminal)
- PIN (2.54mm Pin Header)
- NC (no connector)
- (Special connector on request)

Object Sensor Type:
NTC: By default we mount an NTC1M. If you require an older version (NTC56K), please write it in the comment section of your order or contact us: contact@meerstetter.ch

Thermocouple: To use our TEC Controller with thermocouples type K, you need a TCI-1181 in addition to the TEC Controller with a VIN1 Object Sensor Type configuration.

Display Unit:
It is possible to connect a small or big OLED 2x16 / OLED 4x20 character display directly to the X4 connector. Please visit the DPY-1113 product web page for further information.

Customization:
Many hardware and software features of the TEC-1091 are customizable upon request. Please contact Meerstetter Engineering with your enquiry.

Meerstetter Engineering GmbH
Schulhausgasse 12
3113 Rubigen, Switzerland

meerstetter engineering
Member of Berndorf Group

Phone: +41 31 529 21 00
Email: contact@meerstetter.ch
Website: www.meerstetter.ch

Meerstetter Engineering GmbH (ME) reserves the right to make changes without further notice to the product described herein. Information furnished by ME is believed to be accurate and reliable. However typical parameters can vary depending on the application and actual performance may vary over time. All operating parameters must be validated by the customer under actual application conditions.